LANDSCAPE SPECIFICATIONS:

ALL SOD SHALL CONFORM TO THE STANDARDS OF THE NURSERY SOD GROWERS ASSOCIATION OF ONTARIO. ALL SODDED AREAS SHALL BE PREPARED WITH A MINIMUM OF 300MM OF TOPSOIL AND SODDED WITH #1 BLUEGRASS – FESCUE NURSERY SOD. ON SLOPES, LAY THE TURF PIECES HORIZONTALLY ACROSS THE SLOPE, STARTING AT THE BOTTOM. FOR AREAS WITH A 2:1 SLOPE OR GREATER STAKE SOD TO HOLD IN PLACE WITH 1/2" X 1" X 12" PEGS AT TWO–FOOT SPACINGS.

UNLESS SOIL TESTS SUGGEST OTHERWISE, FERTILIZER SHALL BE APPLIED AS FOLLOWS:
SODDED AREAS: 11–8–4 (11% NITROGEN, 8% PHOSPHOROUS, 4% POTASH) AT 4.5 KG/M2.
PLANTING BEDS: 7–7–7 (7% NITROGEN, 7% PHOSPHOROUS, 7% POTASH) AT 0.12 KG/M3, AND BONE MEAL AT 0.58 KG/M3 OF PLANTING SOIL MIXTURE AS OUTLINED BELOW.

ALL PLANTING BEDS ARE TO BE CONTINUOUS, AND EXCAVATED TO A MINIMUM DEPTH OF 450MM UNLESS NOTED OTHERWISE. PLANTING BEDS ARE TO BE FILLED WITH A SOIL MIXTURE COMPOSED OF 50–60% SAND, 20–40% SILT, 6–10% CLAY, AND 2–5% ORGANIC IN ADDITION TO THE FERTILIZERS SPECIFIED ABOVE, WITH A PH OF 7.5 OR LESS. NATIVE ON–SITE SOILS MAY BE UTILIZED BUT MUST BE TESTED FROM A RECOGNIZED LABORATORY TO DETERMINE IF ANY AMENDMENTS ARE REQUIRED.

ALL PLANT MATERIAL SHALL CONFORM TO THE STANDARDS OF THE CANADIAN NURSERY AND LANDSCAPE ASSOCIATION. ALL PLANT MATERIAL IS TO BE CLAY GROWN STOCK. INSTALL ALL PLANT MATERIAL AS SHOWN ON THE PLANTING PLAN AND DETAILS. USE ONLY VIABLE NURSERY STOCK GROWN IN STRICT ACCORDANCE WITH PROPER HORTICULTURAL PRACTICES WHICH IS FREE FROM DAMAGE, PESTS, AND DISEASE.

ALL BEDS ARE TO BE COVERED WITH A 75MM DEPTH OF CLEAN, SHREDDED PINE BARK MULCH BY ORO–BARK OR APPROVED EQUAL UNLESS NOTED OTHERWISE. TRANSPORTATION, HANDLING, STORAGE AND PLANTING ARE TO COMPLY WITH THE GUIDELINES SET OUT BY THE LANDSCAPE ONTARIO HORTICULTURAL TRADES ASSOCIATION. GUYING AND STAKING OF TREES SHALL CONFORM TO THE PLANTING DETAILS.

THE CONTRACTOR WILL OBSERVE PROPER MAINTENANCE PROCEDURES FOR ALL NEWLY CONSTRUCTED LANDSCAPE WORK AS PER CHAPTER 16 (LANDSCAPE MAINTENANCE) OF LANDSCAPE ONTARIO HORTICULTURAL TRADES ASSOCIATION GUIDELINES. UNLESS OTHERWISE NOTED, THIS WILL APPLY DURING THE CONSTRUCTION PERIOD ONLY. THE CONTRACTOR SHALL MAINTAIN ALL PLANTING AND SODDING UNTIL FINAL ACCEPTANCE IS GRANTED BY THE LANDSCAPE ARCHITECT.

THE CONTRACTOR WILL BE RESPONSIBLE FOR THE PROTECTION OF ALL PLANT MATERIAL FROM DAMAGES RESULTING FROM WINTER CONDITIONS AS WELL AS RODENTS DURING THE WARRANTY PERIOD. APPLY "SKOOT" RODENT DETERRENT FORMULA (OR APPROVED EQUAL) TO ALL CONIFEROUS TREES AND ALL SHRUBS IN LATE OCTOBER AS PER MANUFACTURER'S DIRECTIONS.

THE CONTRACTOR SHALL PROVIDE A FULL TWO YEAR GUARANTEE ON ALL LANDSCAPE WORKS, BEGINNING ON THE DATE THAT FINAL ACCEPTANCE IS GRANTED BY THE LANDSCAPE ARCHITECT.

1 L3 LANDSCAPE SPECIFICATIONS

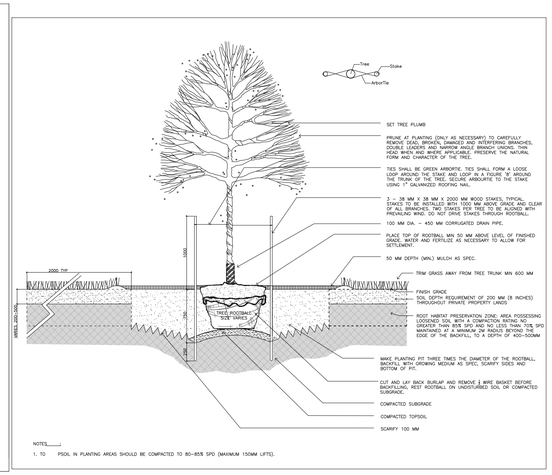

2 L3 DECIDUOUS TREE PLANTING DETAIL

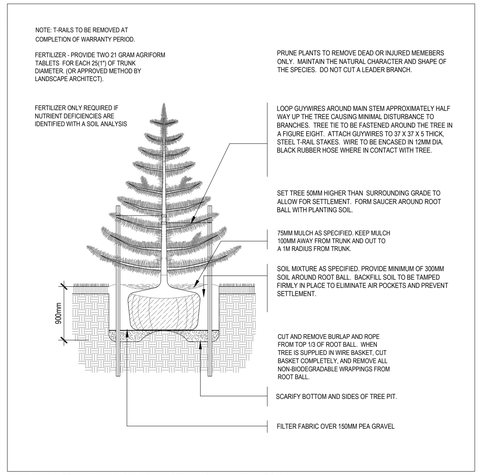

3 L3 CONIFEROUS TREE PLANTING DETAIL

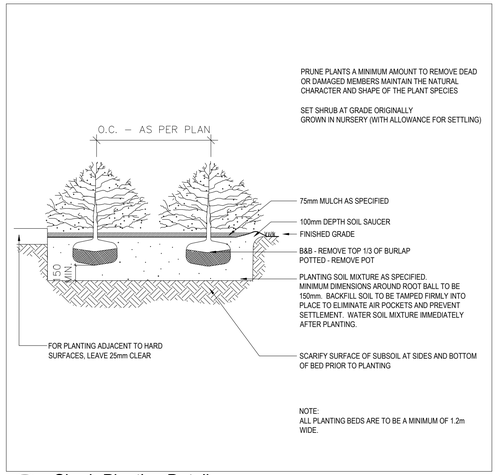

4 L3 Shrub Planting Detail

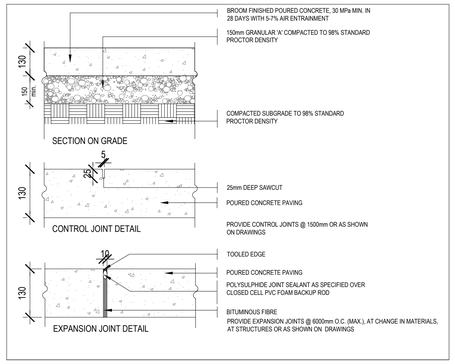

7 L3 CONCRETE PAVING DETAILS (TYPICAL)
N.T.S.

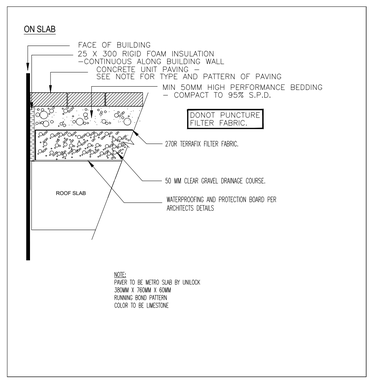

8 L3 CONCRETE UNIT PAVING - ON SLAB
N.T.S.

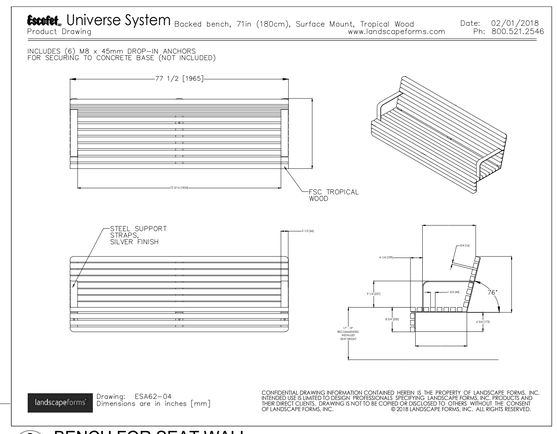

9 L3 BENCH FOR SEAT WALL
N.T.S.

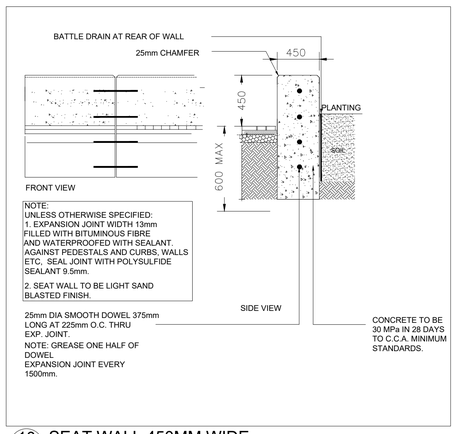

10 L3 SEAT WALL 450MM WIDE
N.T.S.

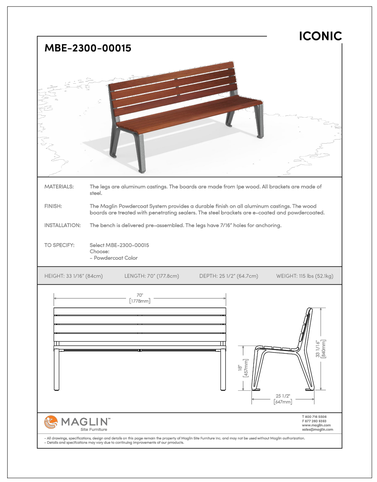

11 L3 STAND ALONE BENCH
N.T.S.

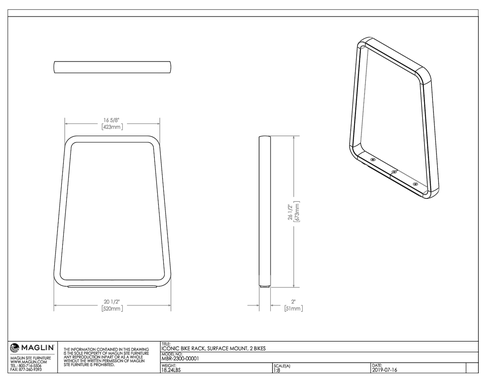

12 L3 BIKE RACK
N.T.S.

GENERAL NOTES

1. Do not scale the drawings. All dimensions are in millimetres unless noted otherwise.
2. This drawing is to be read in conjunction with the overall master plan and engineering drawings prepared by the project engineer and site plans prepared by the project architect.
3. The contractor shall check and verify all existing and proposed grading and conditions on the project and immediately report any discrepancies to the consultant before proceeding with any work.
4. The contractor is to be aware of all existing and proposed services and utilities. The contractor is responsible for having all underground services and utility lines staked by each agency having jurisdiction prior to commencing work.
5. This drawing is to be used for development approval only. For layout of all work refer to construction drawings.
6. Plant quantities indicated on the plan supercede the quantities from the plant list (report any discrepancies to the landscape architect).
7. Do not leave any holes open overnight.
8. Keep area outside construction zone clean and useable by others at all times. Contractor shall throughly clean areas surrounding the construction zone at the end of each work day.
9. Contractor to make good any and all damages outside of the development area that may occur as a result of construction at no extra cost.
10. This drawing is Copyright MHBC 2024

REVISION NO.	DATE	ISSUED / REVISION	BY
2.	October 25, 2024	ISSUED FOR OPA	PD
1.	October 21, 2024	ISSUED FOR REVIEW AND COORDINATION	HH/PD

MHBC PLANNING URBAN DESIGN & LANDSCAPE ARCHITECTURE
230-7050 WESTON ROAD WOODBRIDGE, ON. L4L 8G7 | P: 905 761 5588 F: 905 761 5589 | WWW.MHBCPLAN.COM

STAMP
ONTARIO ASSOCIATION OF LANDSCAPE ARCHITECTS
GREG A. COSTA
OALA
MEMBER

ISSUED FOR SPA ONLY
NOT FOR CONSTRUCTION

All drawings and specifications are instruments of service and will remain the property of MHBC Planning and must be returned at the completion of the work. This drawing shall not be used for construction purposes unless the drawings are marked 'Issued for Construction' and the professional seal is signed and dated by the landscape architect.

DATE	October 2024
DRAWN BY	HH
PLAN SCALE	--
FILE NO.	--
CHECKED BY	P.D.
OTHER	

PROJECT
420 South Service Road
Oakville, Ontario

NOR TH

FILE NAME: DETAILS
DWG NO.: L3

SOURCE
Z:\1677\Y – 420 South Service Rd E, Oakville – LANDSCAPE\2. Drawings\3. Concept\1677Y – Landscape – Oct 25 2024.dwg